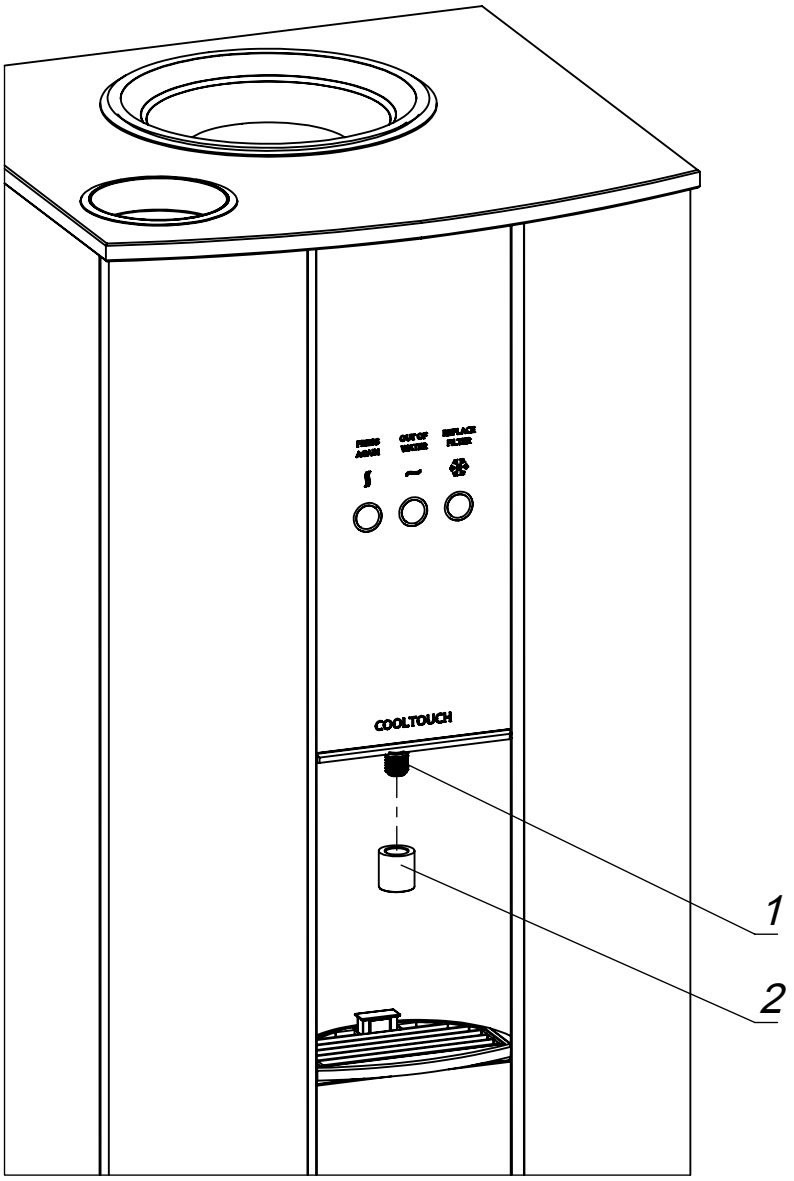

ITEM NO	PART NUMBER	DESCRIPTION	QTY
1	215.33.143	Holder of the solenoid	1
2	200.00.166.01	Tap	1

Replacement of the tap